Winbond Text-to-Speech Evaluation System User's Guide

April 22, 2003

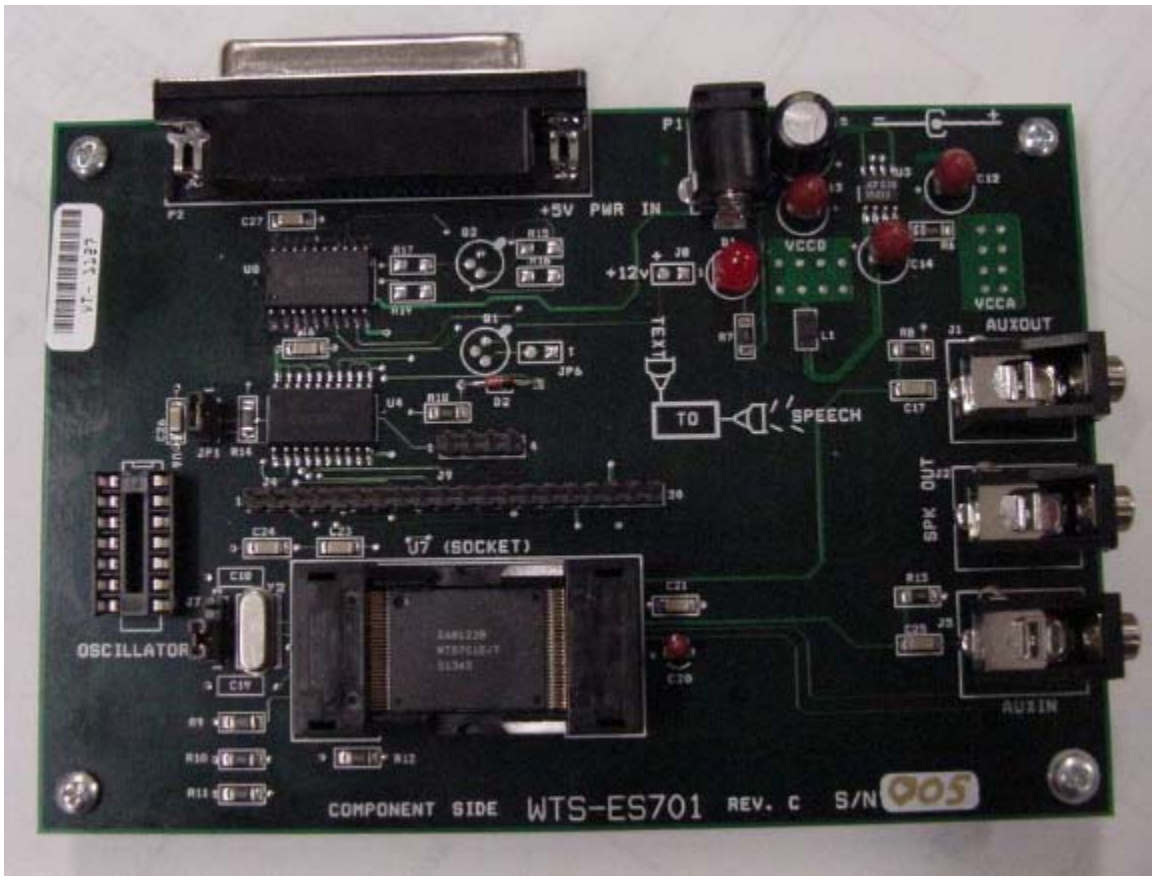

Version 2.01

The Winbond ES701 Evaluation/Development System is a PC-based system that allows the operation of the WTS701 Text To Speech chip to be controlled by a PC via its parallel port. This system serves as a simple easy to use demonstration board as well as a powerful evaluation system.

All the functions of the chip may be selected in real time to allow complete evaluation of this chip for an end application. The hardware includes digital I/O headers and analog audio jacks that will allow easy connection of the demo board to external hardware.

6 Easy Steps to Setup the ES701 Evaluation Board:

1. Run the Setup.exe from the CD ROM folder for the desired language.
2. Connect the IEEE 1284 Parallel Port cable to the evaluation system
3. Connect the 5V DC supply
4. Connect the Speaker to the Speaker jack on the board
5. Open the TTSDemo.exe application software and click 'OK' on Welcome Window
6. Start typing text in the text window using your PC keyboard and click on Send Text button to convert the just typed text to speech, you should hear it on the speaker.

The demo board must be connected to a parallel port on a PC running Windows 98 or later versions of the OS. Please make sure that the printer port is configured for bi-directional mode (Standard, EPP, ECP)



ES701 Application Software Operation:

After starting the Evaluation Board application the “Welcome” screen will appear.

- To operate the board, connect the parallel cable and power to the board. Connect the 8 Ohm speaker to the speaker jack. Click the “OK” button. Next the main screen appears. If the board is not powered up and connected, an error message will appear.

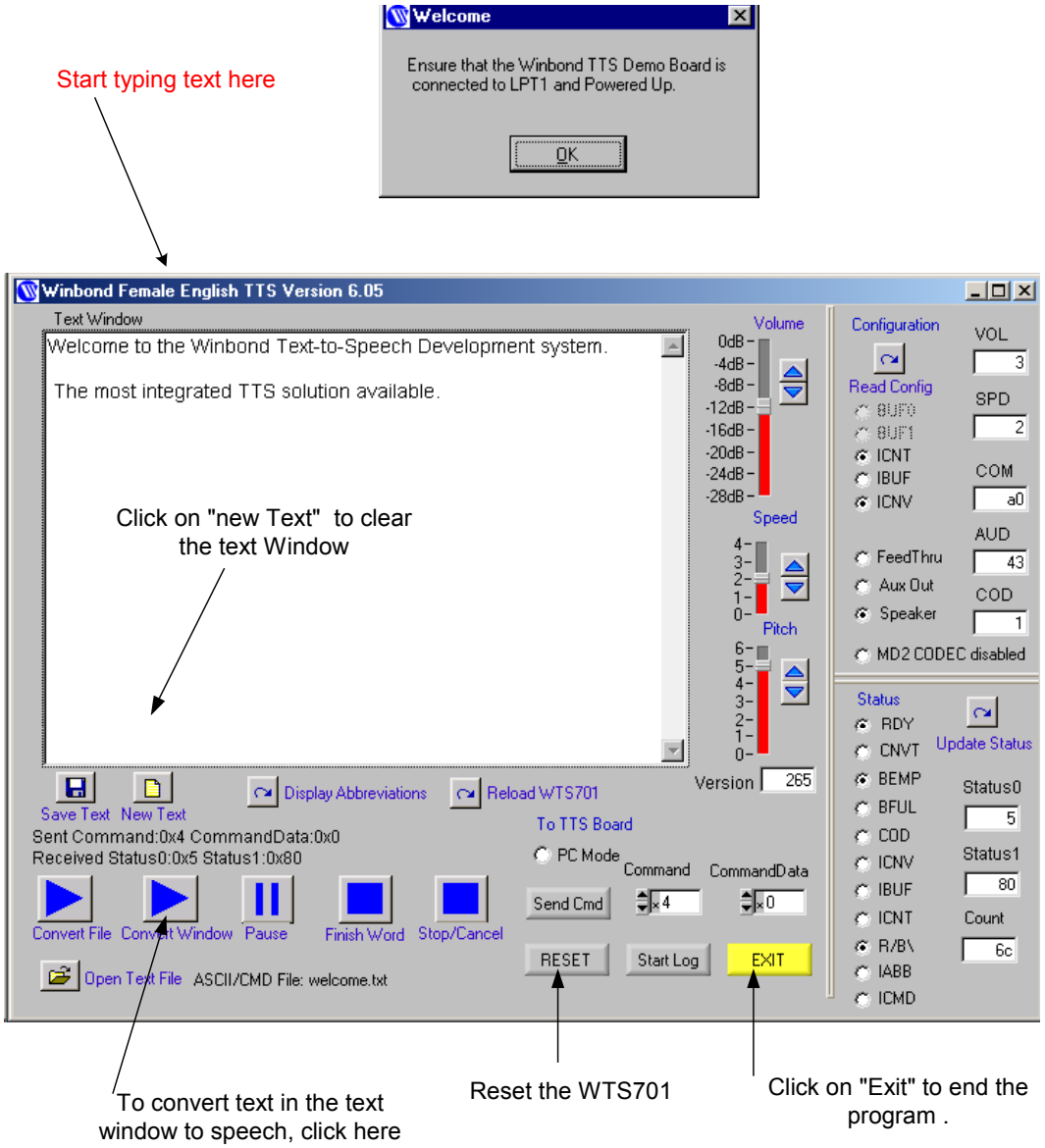

There are two methods of inputting text for conversion:

- Type text in the Text Window and click ‘Convert Window’
- Convert an existing text file by clicking ‘Open Text File’, select the file to convert, then press ‘Convert File’ to hear the speech.

The text in the Text Window can be edited and saved by clicking ‘Save text’.
Clicking ‘New Text’ clears the text window.

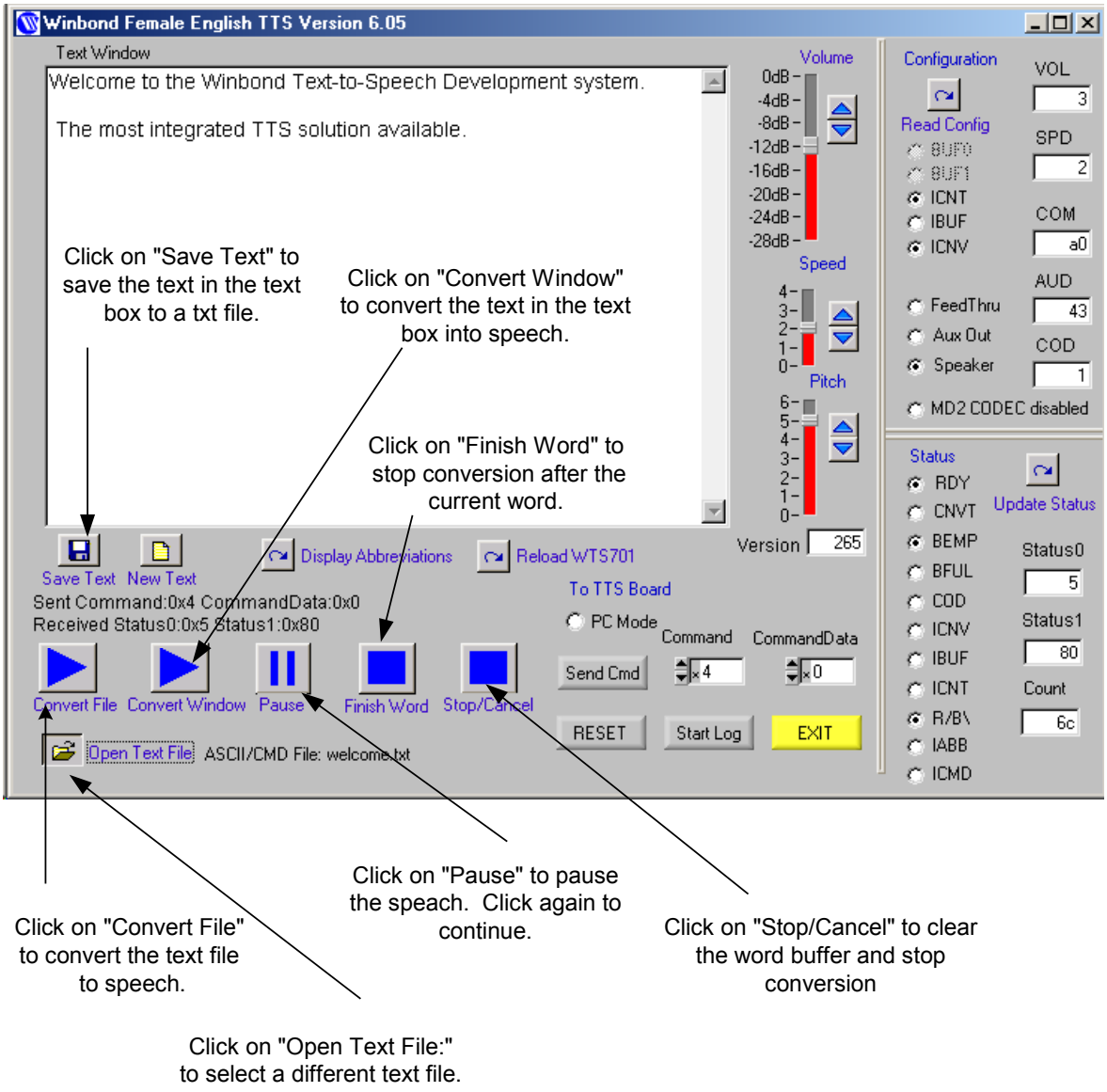

This panel shows the operation while converting text to speech. To pause the conversion on the board, select the “Pause” button. To continue, select the button again. To stop the conversion after the current word is spoken, select the “Finish Word” button. To immediately flush the word buffer and stop conversion, select the “STOP” button.

Loading external text files

To load an ASCII text file, click on the 'Open Text File' button in the bottom left corner of the window, this brings up a list of pre-loaded text files. Press the 'Directory' button to bring up a file selection menu.

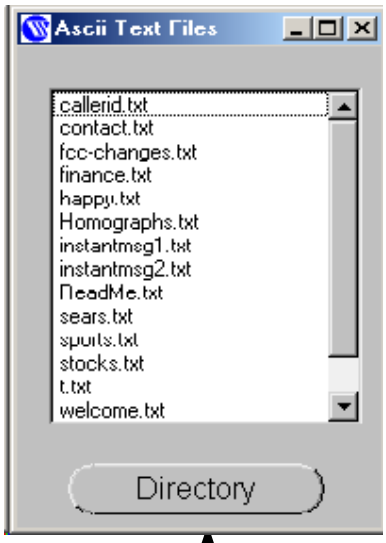

Click on "Directory" and Double Click on the desired file name

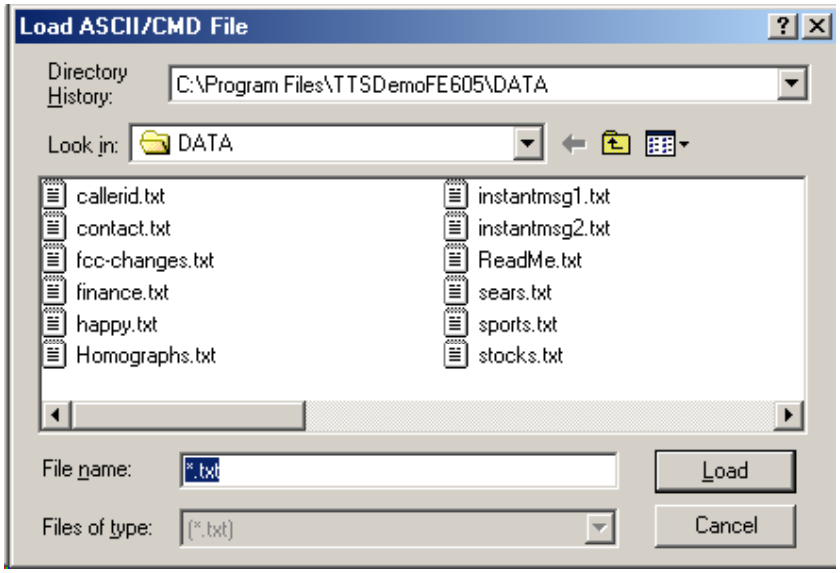

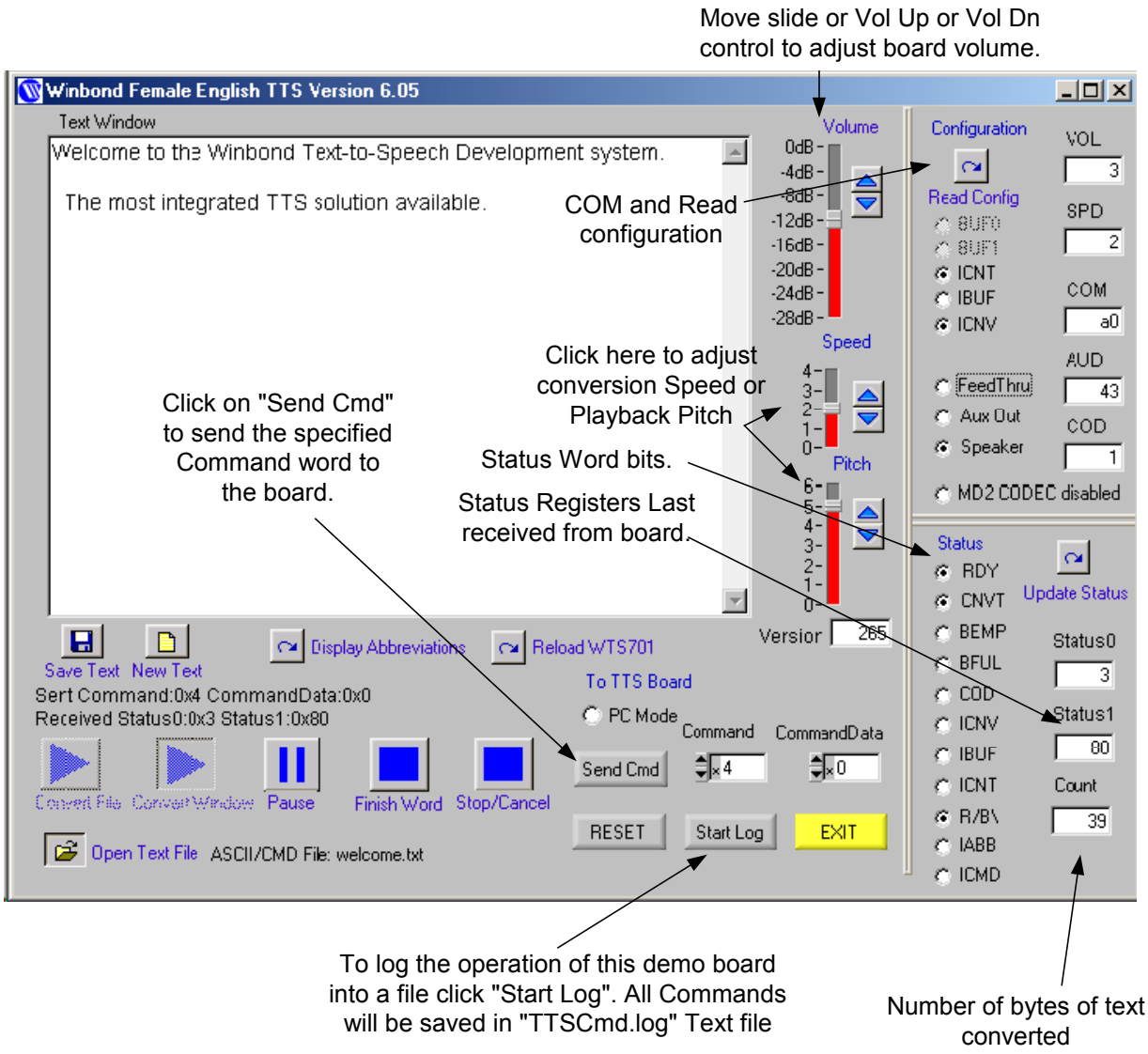

The right hand side of the screen shows:

- Status registers with individual bits displayed.
- Volume, Speed and Pitch controls for the WTS701 chip.
- 'Send Cmd' button will send a command to the WTS701 text to speech processor, but it is limited to Class1 and Class2 command sets. (See the WTS701 datasheet for details). The commands are selected by setting the 'Command' and 'Data' field.
- Start Log allows users to log the operation of the various features implemented on this demo board (commands) into a log file. This file shows the individual command bytes sent in a command sequence.
- The Read Config button will read the internal status bits of the WTS701.
- The PC Mode operation is available for Female English only, the application uses a software model of the TTS engine instead of using actual hardware

WTS701 Board Connectors:

J4 20 Pin Header
The J4 header is used to interface a user circuit to the SPI signal lines of the TTS Demonstration Board. To use the J4 header, disconnect the parallel port cable from the PC and remove JP1 from the TTS board. After this has been accomplished, the user circuit may be connected to J4. The pin definition is below:

1	BCLK	2	FS	11	AUXOUT	12	SPK+
3	DIN	4	MISO	13	SPK-	14	ATTCAP
5	XTI	6	XTO	15	RESET	16	RDY
7	INTB#	8	MOSI	17	VCCA	18	VCCD
9	SSB#	10	SCLK	19	DGND	20	AGND

P2 DB25 Connector
Connects the supplied printer cable to the host PC's LPT1 connector and the TTS board P2 connector. This cable must be disconnected before user circuits are connected to the TTS board

Jumpers and Test Points
J4 header.
J7 Jumper: Must be installed between 1-2.
J8: Not used.
J9: Codec signal
JP1 Jumper in: Selects parallel printer port for the SPI bus.

Audio Connectors
Aux Out:
Aux In:
SPK Out: Speaker Output

P1 Power Jack
5V DC positive polarity for the ES701 board.

The ES701 demo systems hardware schematics:

Power Supply and Printer Port

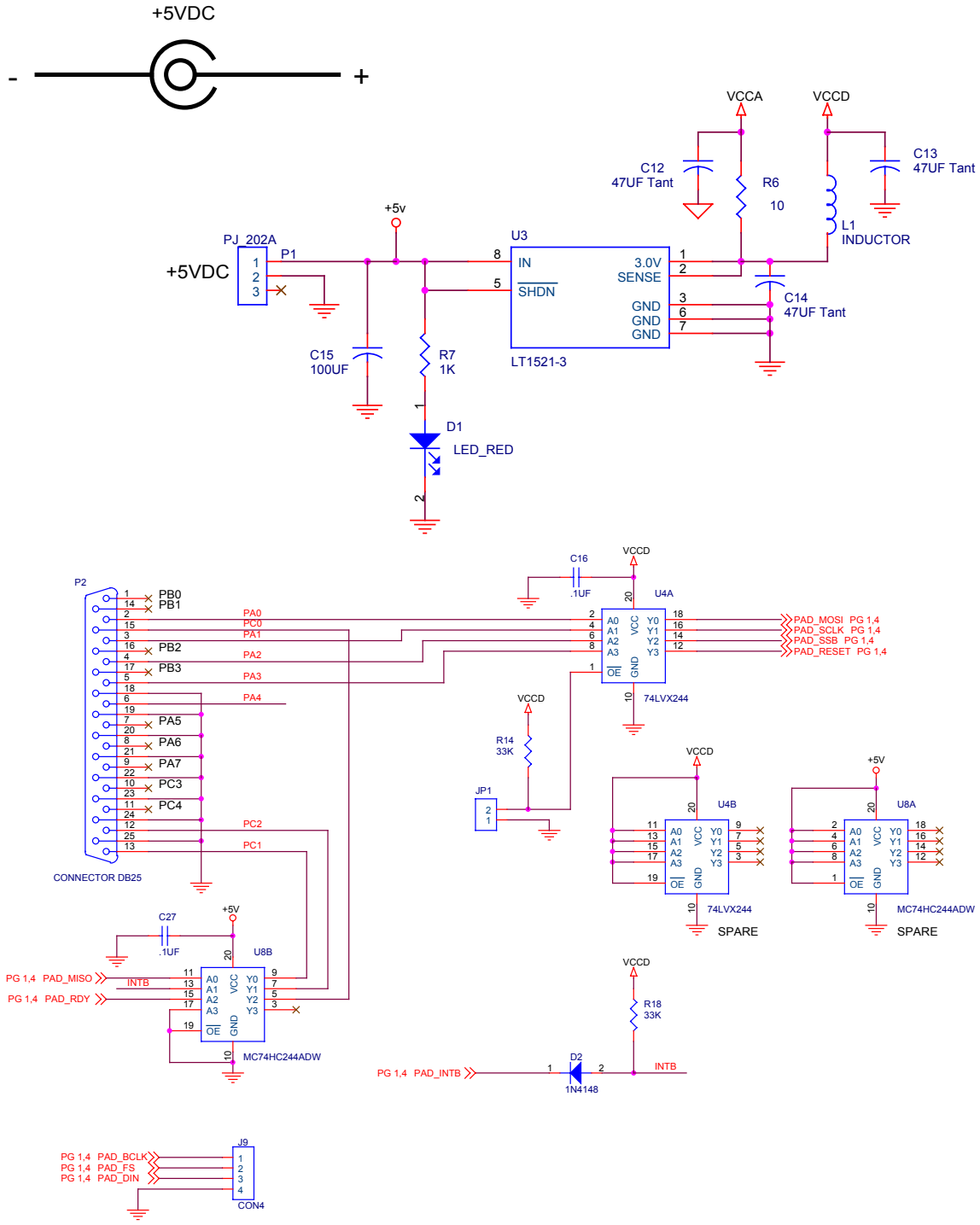

TTS Chip:

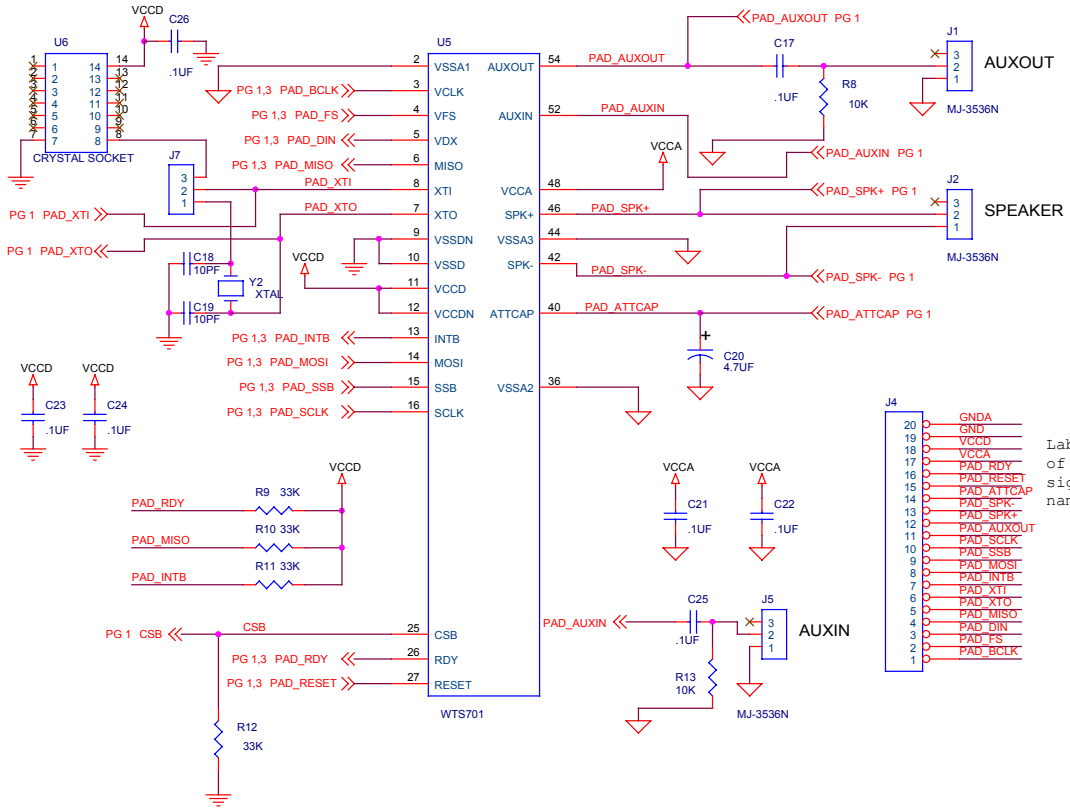

Label pins of J4 with signal names.

In Circuit programming of WTS701 Text To Speech IC:

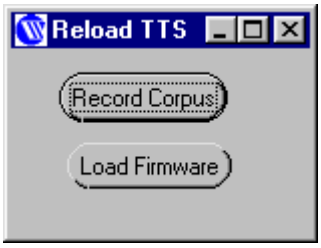

The WTS701 is pre programmed at the factory with the firmware and Corpus. The ES701 allows you to re record the corpus and the firmware and abbreviations. Click 'Reload WTS701 to TTS Board' on the main panel. A pop-up window gives you a choice of Record Corpus or Load Firmware. The Record Corpus takes approximately 8 to 10 minutes on 500 MHz PC. The firmware programming takes about 1 minute.

If a firmware/corpus update is released and the new software reinstalled on the PC, both the firmware and corpus must be updated on the chip. The order of programming does not matter.

Note that all abbreviations stored on the chip will be overwritten when the firmware is updated.

Abbreviation programming:
Use the abbreviation programming to customize your text to speech application. This evaluation kit allows you to test and program various abbreviations. The following graphic illustrates how to add or remove and check your list of abbreviations.

Click on the 'Display Abbreviations' button to bring up the panel shown below.

For example, to add TTS to your abbreviation list type TTS, text to speech; and click on the 'ABBR_ADD' button. You can check to see if was programmed correctly by clicking on 'ABBR_RD'. It will list all abbreviations you have in the systems. Click the 'ABBR_NUM' button to list the number of abbreviation you already have in your entry log.
Note: All abbreviations are case sensitive

To delete TTS from your list of abbreviations type TTS, and click on the 'ABBR_DEL' button. Again you can check to see if it was deleted from your enter list by clicking 'ABBR_RD' or by typing TTS in the text window and click 'Convert Window'. You should hear only TTS.

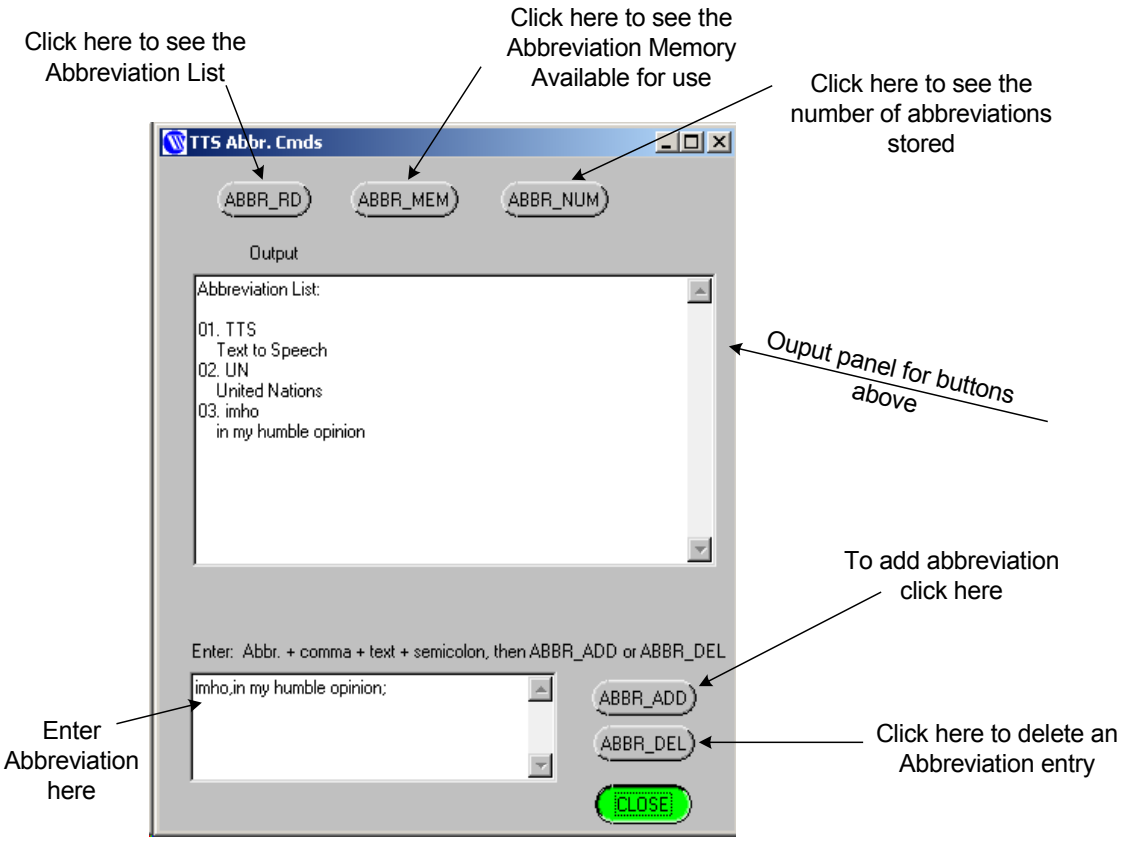

Control Characters

Special control characters allow better emphasis on a word or alter the meaning of sentence. The control characters supported are for phonetic alphabet playback, speed, volume modification and case sensitivity behavior.

The control characters are outside the ASCII range of allowed characters. This application will convert a combination of a caret (^) and a character to a control character. For example, control-P has the hex ASCII code 0x10, typing ^P in the text window will convert this to an ASCII code of 0x10.

Phonetic Alphabet Playback

The WTS701 uses an intermediate phonetic translation with an alphabet that represents phonemes and stress for each input word. This feature allows the text sent to the WTS701 to consist of a combination of ASCII characters as well as phonetic alphabet. This capability offers the flexibility to send words already processed for phonetic representation, achieving the desired pronunciation.
To embed a phoneme string, the string must be preceded by a caret-P (^P, ASCII 0x10) character and terminated by a space character. This application will translate the '^P' sequence to the code 0x10.

For example:
"The quick ^Pbr1Wn fox."

The following table lists the phoneme symbols acceptable by the WTS701E (English software version).

Vowels			**Consonants**		
Phoneme	**Hex Value**	**Example**	**Phoneme**	**Hex Value**	**Example**
i	0x69	b*ea*t	p	0x70	pet
I	0x49	b*i*t	t	0x74	*t*en
e	0x65	b*a*it	k	0x6b	*k*it
E	0x45	b*e*t	b	0x62	*b*et
@	0x40	b*a*t	d	0x64	*d*ebt
u	0x75	b*oo*t	g	0x67	*g*et
U	0x55	b*oo*k	h	0x68	*h*at
o	0x6f	b*oa*t	f	0x66	*f*at
c	0x63	b*ough*t	T	0x54	*th*ing
a	0x61	B*o*b	D	0x44	*th*at
A	0x41	b*u*t	s	0x73	*s*at
R	0x52	b*ur*r	S	0x53	*sh*ut
O	0x4f	b*oy*	v	0x76	*v*at
Y	0x59	b*uy*	z	0x7a	*z*oo
W	0x57	d*ow*n	Z	0x5a	a*z*ure
x	0x78	*a*bout	y	0x79	*y*ou
X	0x58	rose*s*	w	0x77	*w*it
			r	0x72	*r*ent
			l	0x6c	*l*et
			m	0x6d	*m*et
			n	0x6e	*n*et
			G	0x47	si*ng*
			C	0x43	*ch*u*rch*
			J	0x4a	*j*u*dge*

Note that each phoneme is represented by exactly one character and each vowel is preceded by a *pitch symbol*.

Numbers 1 and 0 represent stress: each word has a single 1 stress, representing the main stress syllable of the word; all other syllables have 0 stress.

Examples:

Input	**Phonetic translation**
hi	h1Y (phoneme /h/, followed by a 1-stress vowel phoneme Y)
test	t1Est
testing	t1Est0IG

Speed Change

The rate of speech can be changed by sending SPI command to modify the speed or by adding a control character to control the speed in real-time.
The character 0x13 (^S) is used by WTS701 for Speed Change control character. A space is needed between the control characters and the actual input text string.

^S+: Increase speed by 1 (e.g. ^S+ Hello world).
^S-: Decrease speed by 1 (e.g. ^S- Hello world).
^Sn: Set the speed to n. n ranges from 0 to 4 (e.g. ^S1 Hello world).
Any number that is greater than 4 will be set to 4.

It's the user responsibility to verify the WTS701 speed setting before sending a control character and/or SPI command that modify speed.

Volume Change

The speech volume can be changed by sending SPI command to modify the speed or by adding control character to control the volume in real-time.
The character 0x16 (^V) is used by WTS701 for Volume Change control character. A space is needed between the control characters and the actual input text string.

^V+: Increase volume by 1 (e.g. ^V+ Hello world).
^V-: Decrease volume by 1 (e.g. ^V- Hello world).
^Vn: Set the volume to n. n ranges from 0 to 7 (e.g. ^V1 Hello world).
Any number that is greater than 7 will be set to 0.

It's the user responsibility to verify the WTS701 volume setting before sending a control character and/or SPI command that modify volume.

Case Sensitivity

The way upper/lower case is being handled can be changed by adding a control character in the text sent to control the case sensitivity behavior in real-time.
The character 0x15 (^U) is used by WTS701 for Case Sensitivity rules whether to ignore upper case letters (CAPs) or not. A space is needed between the control characters and the actual input text string.

^U0: CAPs all spell out with Abbreviation support (e.g. ^U0 HELLO WORLD). This is the default setting.
^U1: Avoid CAPs spell out with no Abbreviation support.
^U2: All spell out with no Abbreviation support.